GALILEI

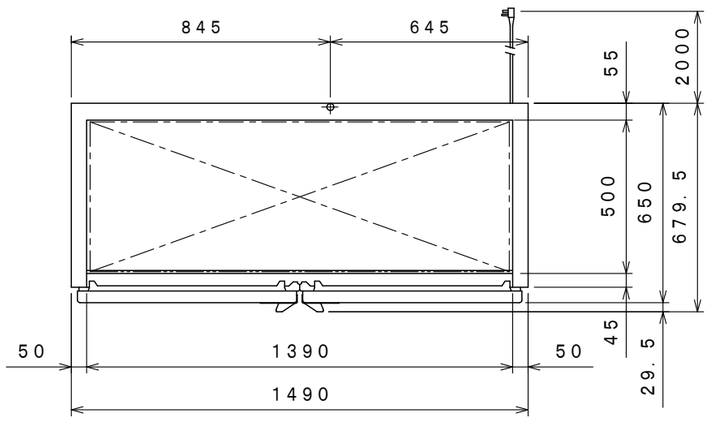

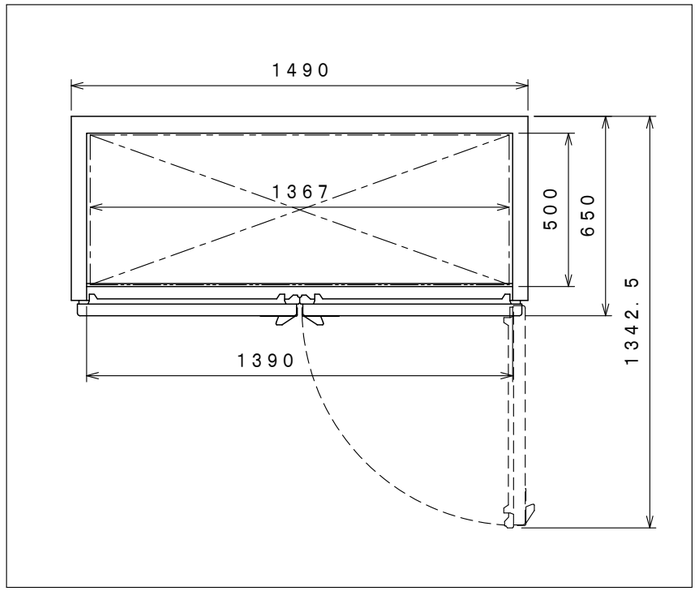

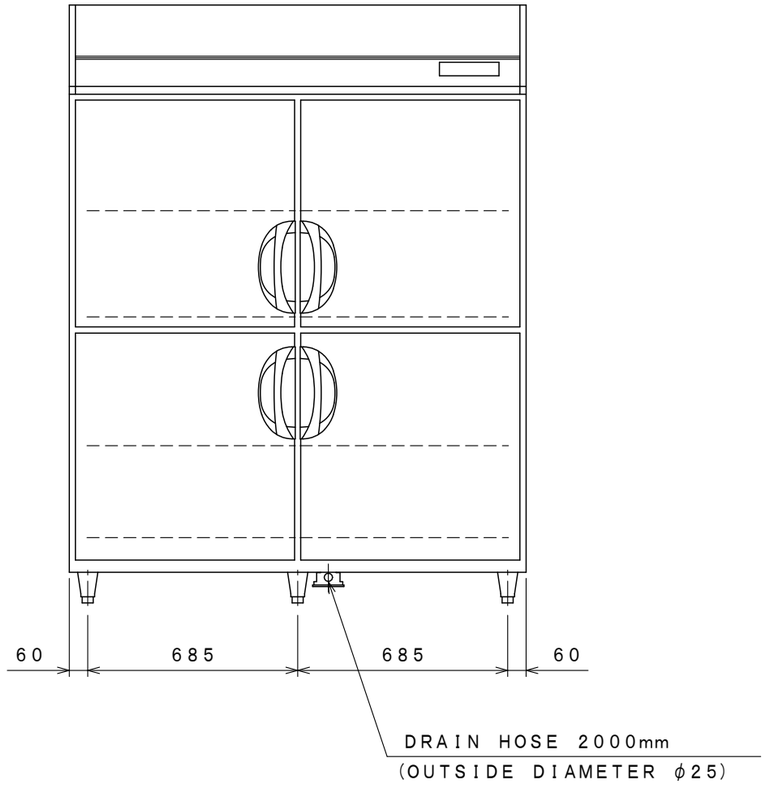

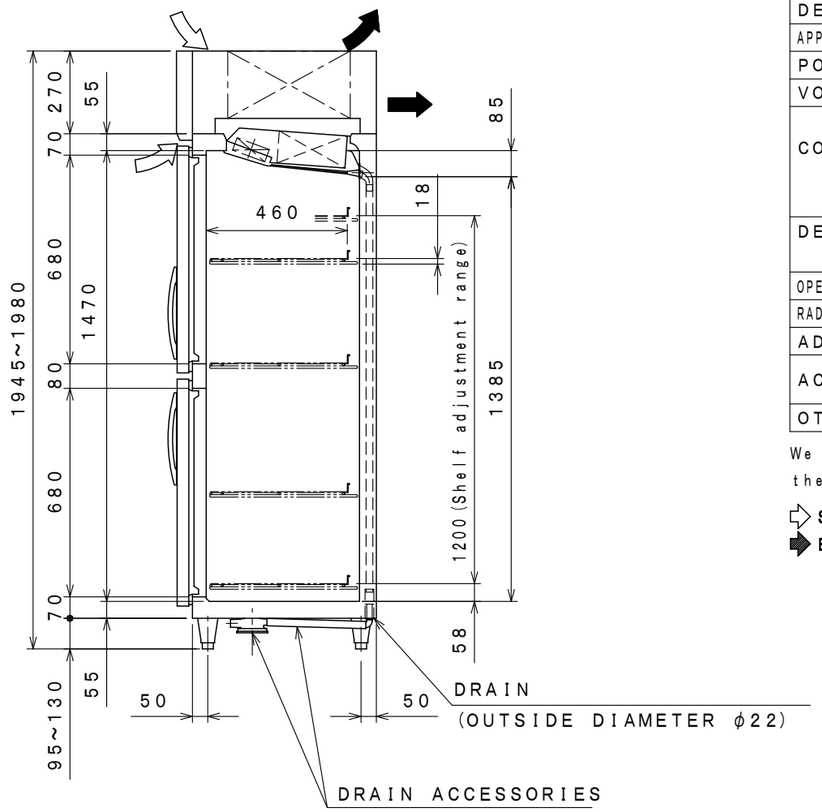

PRODUCT NAME	Commercial Refrigerator(Upright Type)	
MODEL	URN-150RMFC-TH	
POWER SUPPLY	Single Phase 220V 50Hz	
OUTSIDE DIMENSIONS	(W) 1490mm× (D) 650mm× (H) 1950mm	
INSIDE DIMENSIONS	(W) 1390mm× (D) 500mm× (H) 1470mm	
EFFECTIVE CAPACITY	1077L	
WEIGHT	135kg	
EXTERIOR MATERIAL	Stainless Steel(Front and Sides) Galvanized Steel(Top) Galvanized Steel(Rear and Bottom)	
INTERIOR MATERIAL	Stainless Steel	
DOOR MATERIAL	Stainless Steel(Front)	
	ABS Resin, Magnet-Style Packing(Rear)	
INSULATION MATERIAL	Polyurethane Foam	
ADJUSTABLE SHELF MATERIAL	Steel Wire Resin coating	
COOLING PERFORMANCE	-5℃ to 10℃ (No Load and Ambient Temperature of 30℃)	
COMPRESSOR	425W	
REFRIGERANT CONTROL METHOD	Capillary Tube	
CONDENSER	Fin and Tube Type, Forced Air-Cooling	
EVAPORATOR	Fin and Tube Type, Forced Cold Air Circulation	
REFRIGERANT	R-404A	
TEMPERATURE CONTROL	Microcomputer Control, Digital Display	
DEFROST CONTROL	Microcomputer Control Defrost Heater	
APPLICABLE BREAKER CAPACITY	Single Phase 220V 15A 50Hz	
POWER CORD	2.0m(Plug with Earth Wire)	
VOLTAGE RANGE	220V±6%	
COOLING	Operation Current	2.3A
	Starting Current	11A
	Power Consumption	495W
	Power Factor	98%
DEFROSTING	Operation Current	1.3A
	Power Consumption	286W
OPERATING TEMPERATURE RANGE	5℃ to 35℃	
RADIATION OF HEAT CAPACITY	1010W	
ADJUSTABLE LEG	Resin made Leg form 95 to 130mm	
ACCESSORIES	Shelves(4 Pieces) Drain Accessory(1 Set)	
OTHER ACCESSORIES	Condenser Filter	

We may change it without a notice for improvement about the specifications and design.

⇨ SUCTION AIR
➡ EXHAUST AIR

PLUG TYPE

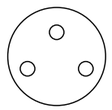

		REFERENCE NO
DATA 08・06・2020	SCALE 1/20	DRAWING NO

GALILEI (THAILAND) CO., LTD.